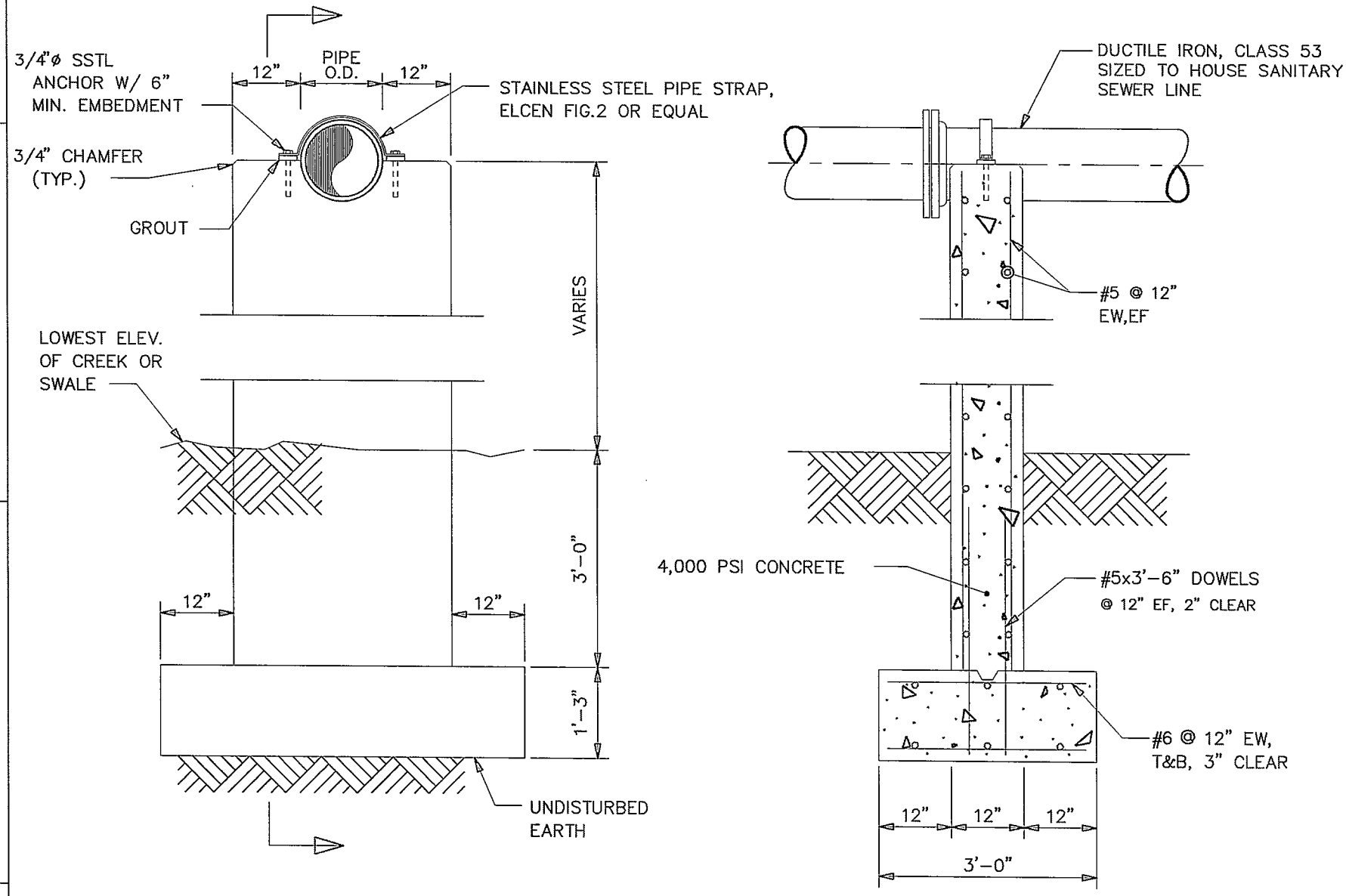

CCSD

CLERMONT COUNTY SEWER DISTRICT

APPROVED

DATE

SUPPORT PIER

DRAWING NO. S2.4

NO SCALE